未注公差/General tolerances(mm)														
0 ~ 3	>3 ~ 6	>6 ~ 10	>10 ~ 18	>18 ~ 30	>30 ~ 50	>50 ~ 80	>80 ~ 120	>120 ~ 180	>180 ~ 250	>250 ~ 315	>315 ~ 400	>400 ~ 500	>500	0.1/10
±0.12	±0.18	±0.22	±0.26	±0.31	±0.37	±0.57	±0.80	±0.93	±1.05	±1.15	±1.60	±2.20	±2.50	±2°

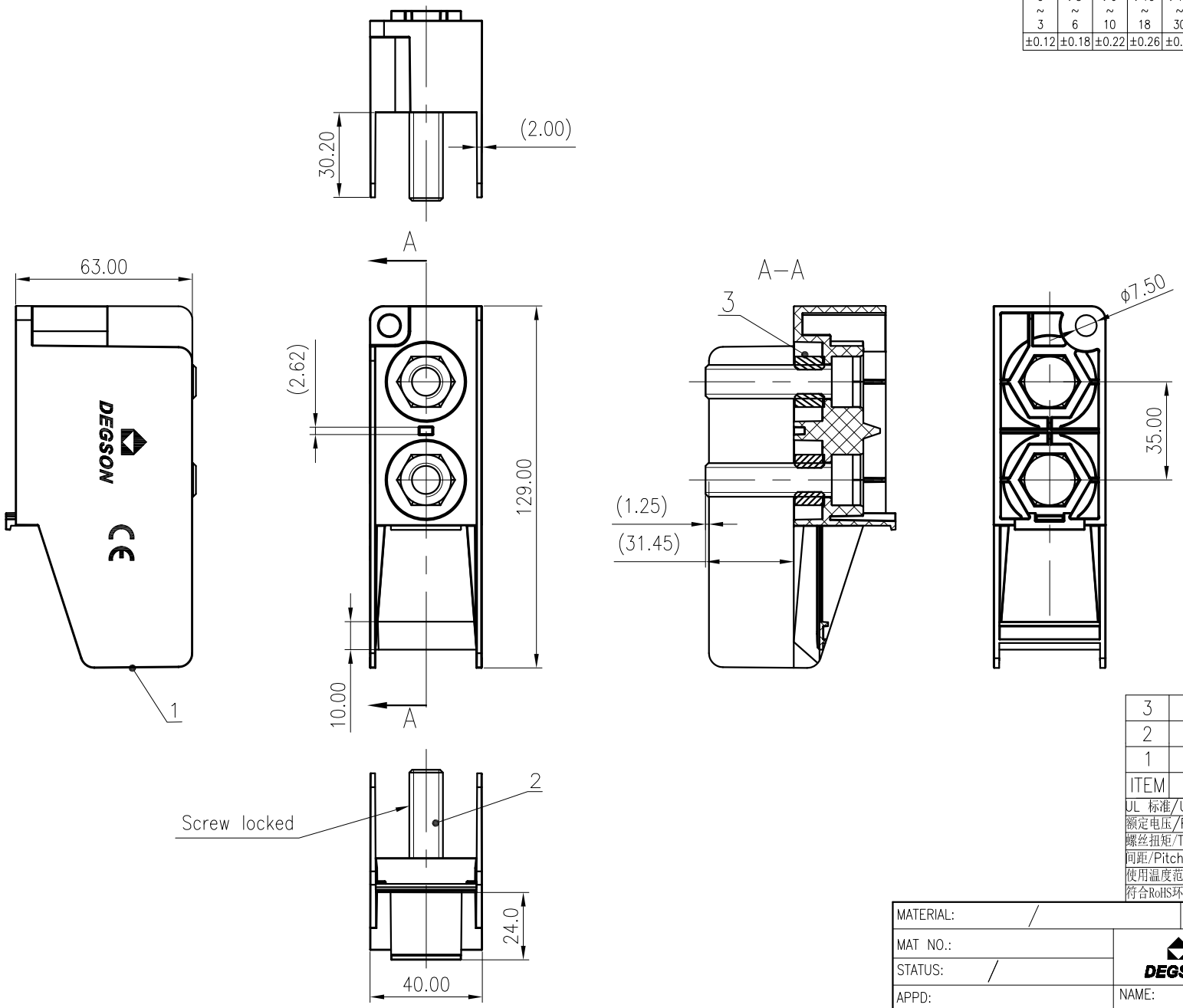

ITEM	NAME OF PART	MATERIAL	NOTES
3	M12 Nut	Steel	Zn Plated
2	M12*45 Screw	Steel	Zn Plated
1	Housing	PC	UL94V-0

UL 标准/UL Standard:	B	C	D
额定电压/Rated Voltage(V)	600	/	600
螺丝扭矩/Torque Tightening(N·m/Lb.in)	M12, 40/354.2		
间距/Pitch(mm)/线数范围/Poles	40/N=02P		
使用温度范围/Operating temperature(°C)	-40~+105		
符合RoHS环保要求/Conform to RoHS	Yes		

REV	ECN	DESCRIPTION	DRFT	DATE

MATERIAL: / SURFACE: /

MAT NO.:

STATUS: /

APPD:

CHKD:

DRFT: Wu NK 2020.12.26

SIZE: A4 mm (inch)

DEGSON®

宁波高松电子有限公司
NINGBO DEGSON ELECTRICAL CO., LTD

NAME: DGB40-02P-1Y-00A(H)

DRAWING NO.: 12000142 REV D0

TYPE: CUSTOMER DRAWING SCALE: 1:2 SHEET 1/1

Transfer or duplication of this document as well as the utilization or communication of its contents are prohibited unless explicit authorization is granted. Violations will be liable for compensation. All rights reserved for patent, utility model or designs registrations. 除非给予明确授权，否则禁止转让、复制、利用、交流本文件的内容。侵犯者将负赔偿责任。本公司保留对涉及发明、实用新型和外观专利的所有权利。